EDITION 01 2K25

MORZZE

Beyond Excellence...

By Anupam Group

DESIGNER WASH BASIN

pedra Collection

www.morzze.com

MORZZE

Beyond Excellence...

White

Black

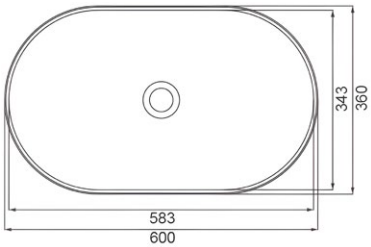

Model Code	**MBB-401**
Item	24" Inch Counter Top Basin
Overall Dimensions	600x360x130mm / 23.5"x14"x5"
Bowl Dimensions	583x343x110mm / 23"x13.5"x4.25"
Accessories Included	Drainer
Available Colours	Black, White

White

Black

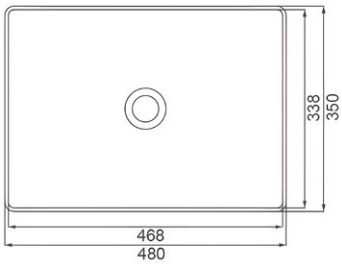

Model Code	**MBB-402**
Item	19" Inch Counter Top Basin
Overall Dimensions	480x350x125mm / 19"x13.75"x 5"
Bowl Dimensions	468x338x105mm / 18.5"x13.25"x 4"
Accessories Included	Drainer
Available Colours	Black, White

MORZZE

Beyond Excellence...

White

Black

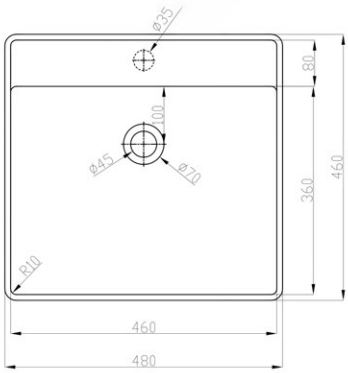

Model Code	**MBB-403**
Item	19" Inch Counter Top Basin
Overall Dimensions	480x460x145mm / 19"x18"x 5.75"
Bowl Dimensions	460x360x115mm / 18"x14"x 4.5"
Accessories Included	Drainer
Available Colours	Black, White

White

Black

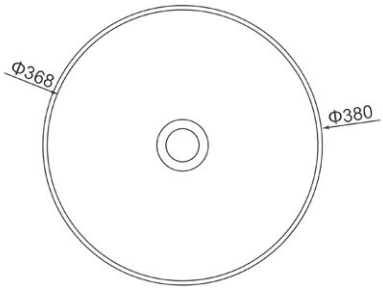

Model Code	**MBB-404**
Item	15" Inch Counter Top Basin
Overall Dimensions	380mm Ø / 15" Ø x 150mm/ 6"
Bowl Dimensions	368mm Ø / 14.5" Ø x 120mm / 4.75"
Accessories Included	Drainer
Available Colours	Black, White

MORZZE

Beyond Excellence...

Anupam GROUP

Corporate Office:

Anupam Retail Limited
A-42, Phase-I, Naraina Industrial Area
New Delhi-110028

Email: info@morzze.com
Website: www.morzze.com
Helpline: 1800 110 123

Morzze Reserves the right to amend its products without prior notification, as deemed appropriate to improve their features. Therefore, all designs, diagrams and measurements in this catalogue are not binding but provided as a mere indication. Actual product shape and size may vary from the image shown. Accessories shown in the pictures are not part of standard offering. Photographs and colour may differ from standard offer. Faucet, Waste Coupling, or any accessory's design and model may vary as shown in the included accessories.

FIND US!

FIND US!

www.morzze.com

@morzzeindia